Registration no: | | | | | | | | | | |

Total Number of Pages: 03

B.TECH
BE2103

1st Semester Back Examination – 2017-18
Thermodynamics
BRANCH(S): AEIE, AERO, AUTO, BIOTECH, CHEM, CIVIL, CSE, ECE, EEE, EIE, ELECTRICAL, ETC, FASHION, IEE, IT, MANUTECH, MECH, METTA, MME, PE, PLASTIC
Time: 3 Hours
Max marks: 70
Q code:B1030

Answer Question No.1 which is compulsory and any five from the rest.
The figures in the right hand margin indicate marks.

Q1 **Answer the following questions:** **(2 x 10)**

a) Distinguish between qualitative and quantitative law.

b) Write two reasons 'why carnot cycle is not practically possible'.

c) What is Free expansion? Find work done for free expansion process in both quasi-equilibrium and non quasi equilibrium process

d) Explain the principle of thermocouple.

e) In what respect heat & work, heat & internal energy are similar

f) In the h-s diagram, the isobars are of equal slope lines in the liquid – vapour region. why?

g) Under what conditions is the work done is $\int_1^2 PdV$?

h) What are the parameters needed to be specified to define a thermodynamic system

i) All adiabatic reversible process is Isentropic process or vice versa is true or not. Justify.

j) Suppose there is a heat engine that operates with 100% thermal efficiency. Does it necessarily violate the First law or second law! Explain.

Q2 **a)** A fluid at 0.7bar occupying 0.09m^3 is compressed reversibly to a pressure of 3.5bar according to pv^n=const. The fluid is then heated reversibly at constant volume until the pressure is 4 bar the specific volume is then 0.5m^3/kg. A reversible expansion to the law pv^2=const, restores the fluid to its initial state. Sketch the cycle on PV diagram and calculate **(7)**

i) The mass of the fluid present
ii) The value of "n" in the 1st process
iii) The net work of the cycle

b) Show that Cp-Cv=R **(3)**

Q3 Air flows steadily at the rate of 0.4 kg/sec through an air compressor entering at 6m/sec with a pressure of 1bar and specific volume of $0.85m^3/kg$, and leaving at 4.5m/sec. with a pressure of 6.9 bar and a specific volume of $0.16m^3/kg$. Internal energy of air leaving is 88 KJ/kg greater than that of air entering. Cooling water in a jacket surrounding the cylinder absorbs heat from the air at a rate of 59 W. calculate the power required to drive the compressor and the area of cross section of inlet and outlet **(10)**

Q4 a) Steam at 5Mpa and 500^oC enters a nozzle steadily at a velocity of 80 m/sec and it leaves at 2 Mpa and 400^oC. The inlet area of the nozzle is 38 cm^2 and heat is being lost at a rate of 8Kg/sec. Determine **(7)**

(a) Mass flow rate of the steam
(b) The exit velocity of the steam and
(c) The exit area of the nozzle

b) Two kg water at 120^oC with a quality of 25% has its temperature raised 20^oC in a constant volume process. What are the new quality and specific internal energy? **(3)**

Q5 a) A BPUT student runs a heat pump with a motor of 2 kW. He/She should keep his/her class room at 30^oC which loses energy at a rate of 0.5 kW per degree difference to the colder ambient. The heat pump has a coefficient of performance that is 50% of a Carnot heat pump. What is the minimum ambient temperature for which the heat pump is sufficient? **(5)**

b) A reversible engine, as shown in Figure during a cycle of operations draws 5 MJ from the 400 K reservoir and does 840 kJ of work. Find the amount and direction of heat interaction with other reservoirs. **(5)**

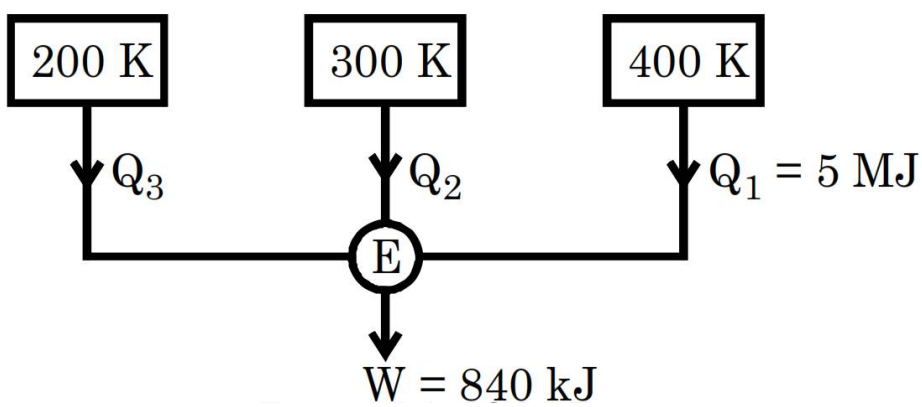

Q6 a) Show that the overall efficiency of two cycles coupled in series equals the sum of the individual cycle efficiencies minus their product. **(4)**

b) A gas is compressed hyperbolically from a pressure and volume of $100kN/m^2$ and 0.056 m^3 respectively, to a volume of $0.007m^3$, determine the final pressure and work done on the gas **(6)**

Q7 A vessel of $6m^3$ capacity contains two gases A & B in proportion of 45% and 55% respectively at 30°C. if the gas constant R for the gases is 0.288 kJ/kg-K and 0.295 kJ/kg-K and total weight of mixture is 2 kg, calculate **(10)**

a) the partial pressure
b) the total pressure
c) the mean value of R for the mixture

Q8 **Write Short Notes** **(2.5 x 4)**

a) Combine mode of heat transfer
b) Throttling Calorimeter
c) Clausius inequality
d) Callibration of thermometer